EMI-Tight Rectangular Connector Assemblies

SPCD, the 11th of October 2018

DEFENCE AND SPACE
AXON: E. GILBERT, G. ROUCHAUD
ESA: L. GARCIA PERALES, D. LACOMBE, L. FARHAT
C&K : O. MASSON, R. ANTOINE
ADS : A. THOUAND

11 October 2018

AIRBUS

Connector problematic

- Radio frequency interference,
- High speed with fast edge signals,
- Elecromagnetic interference,
- Sensitive receivers,
- Radio frequency compatiility.

Sub-D

Micro-D

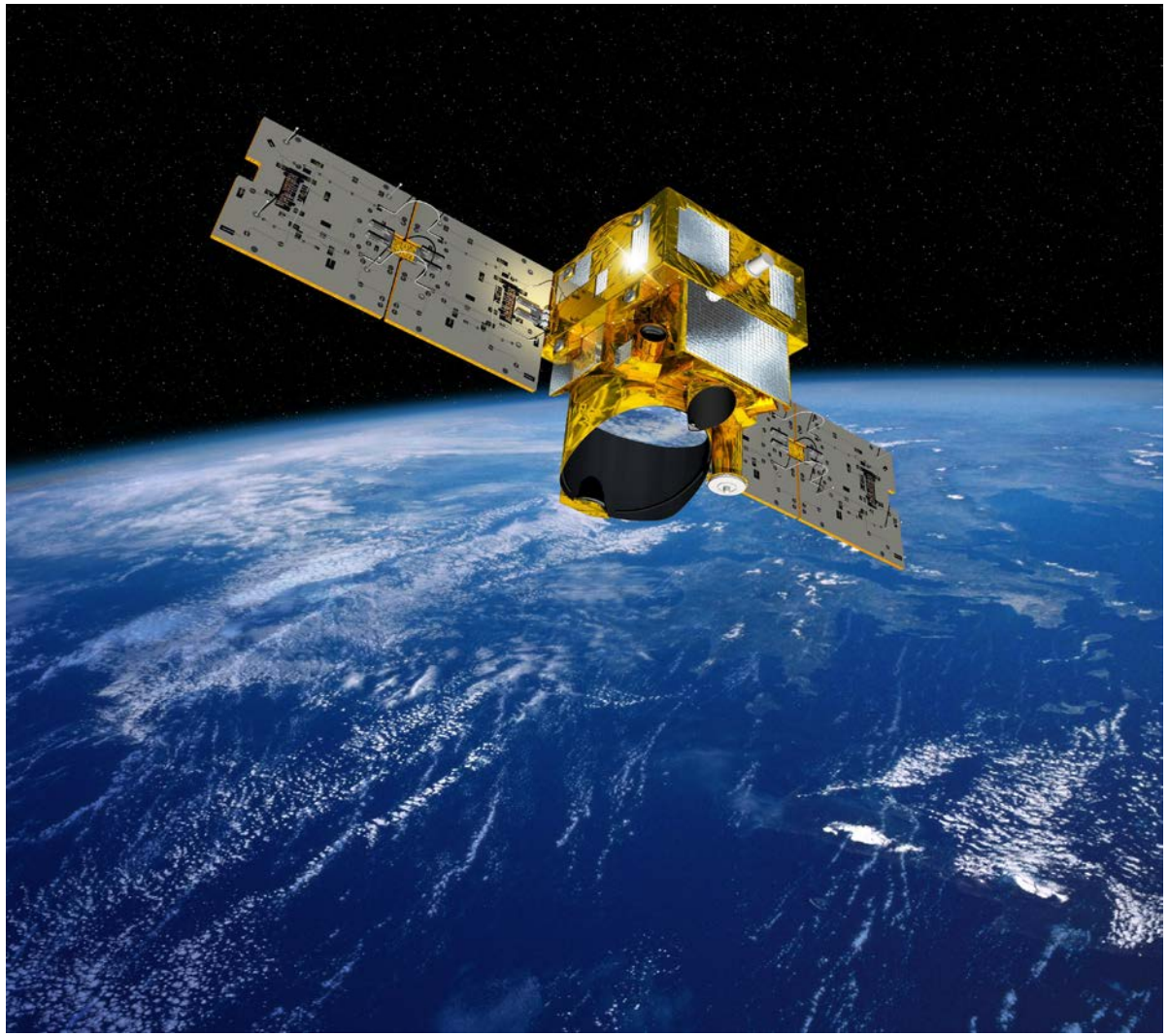

AIRBUS

Identified problem

3 area of leakages:

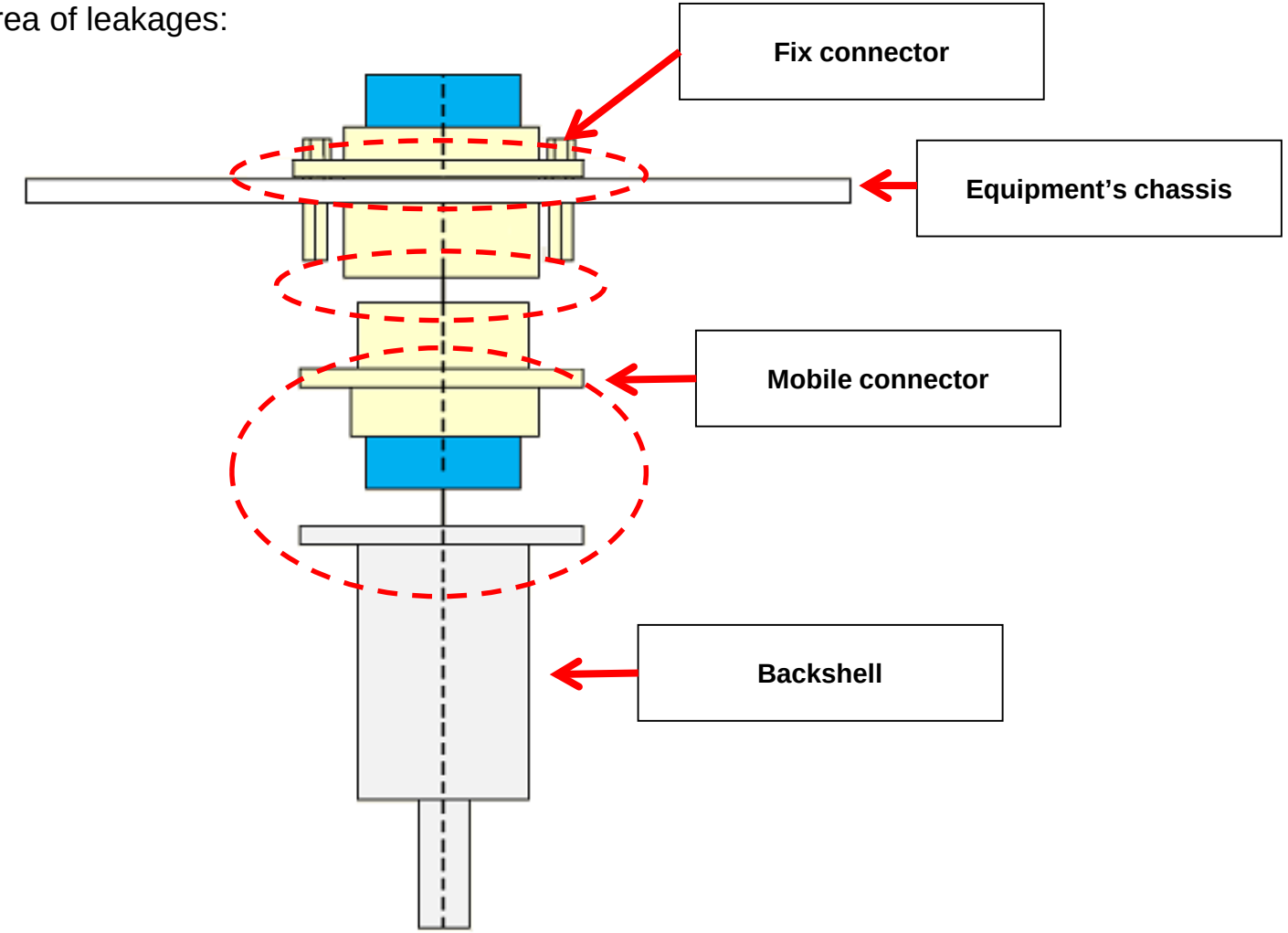

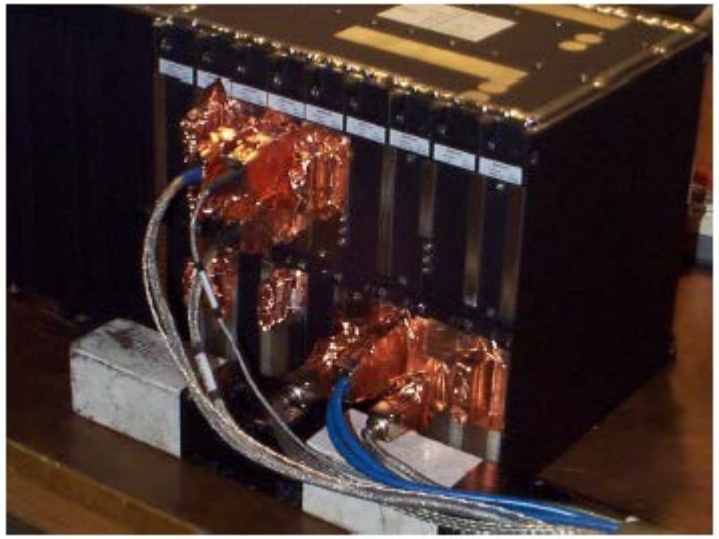

AIRBUS

Sub-D technologies

Panel mount connectors:

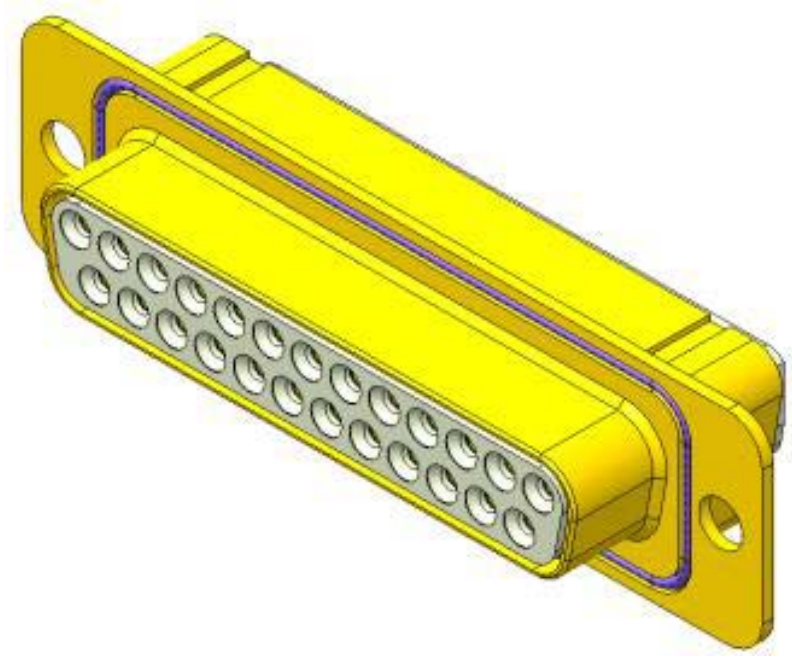

D*Sub female connector, machined shell with RF gasket in groove

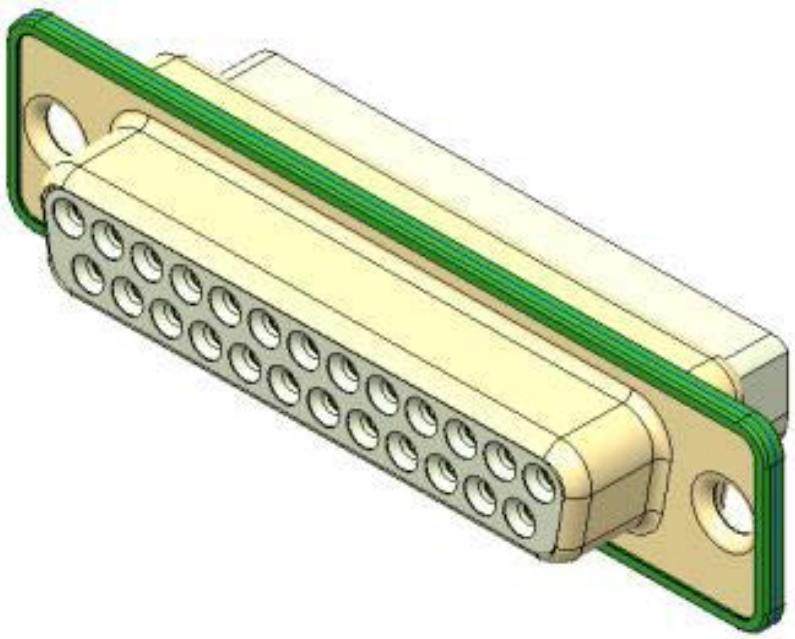

D*Sub standard female connector with surrounding EMI gasket

AIRBUS

Sub-D technologies

Panel mount connectors:

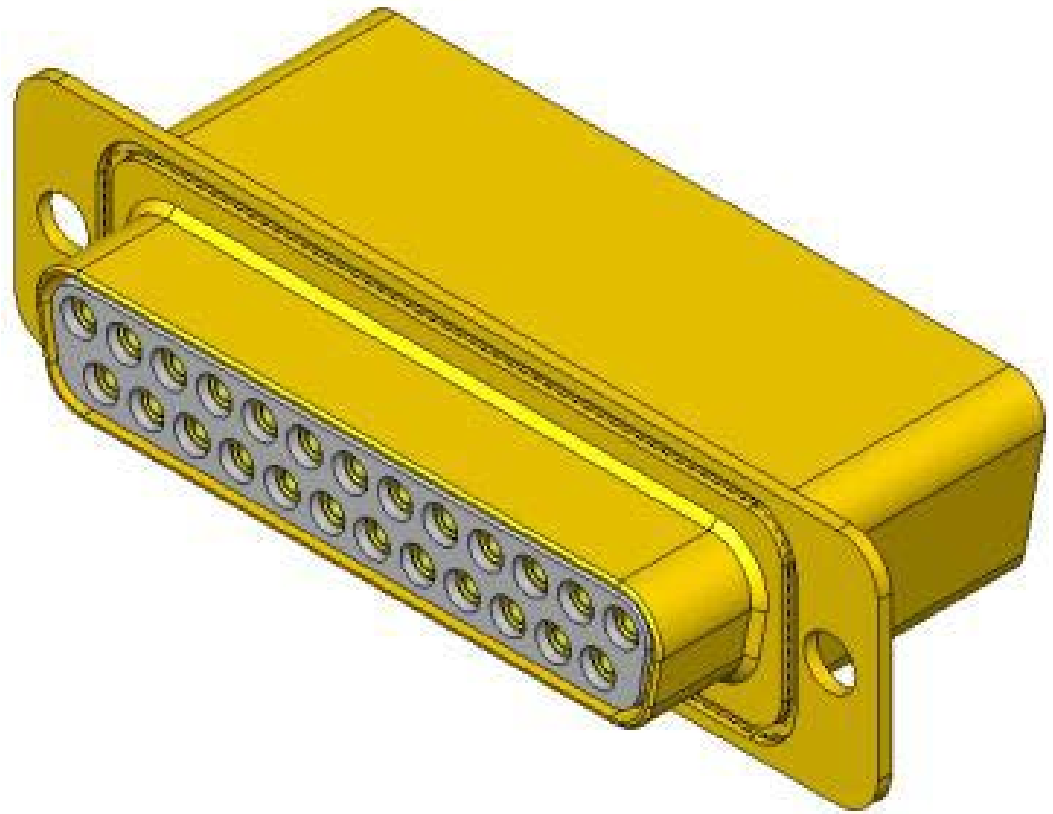

D*Sub female connector with integrated absorbing epoxy

AIRBUS

Sub-D technologies

Mobile connectors:

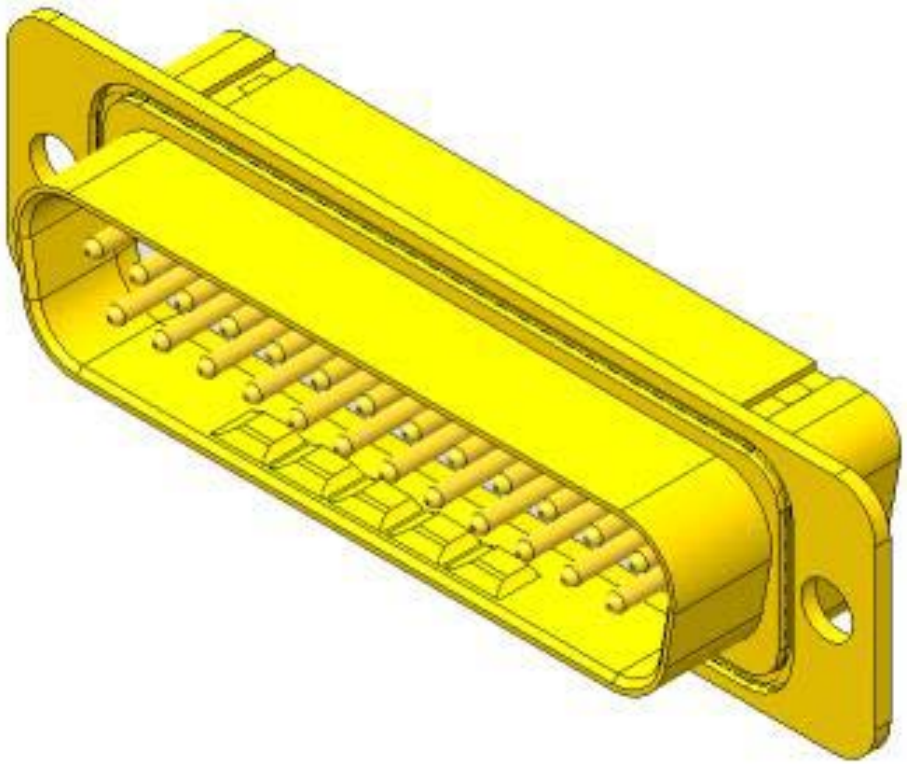

D*Sub male connector, machined shell with dimples

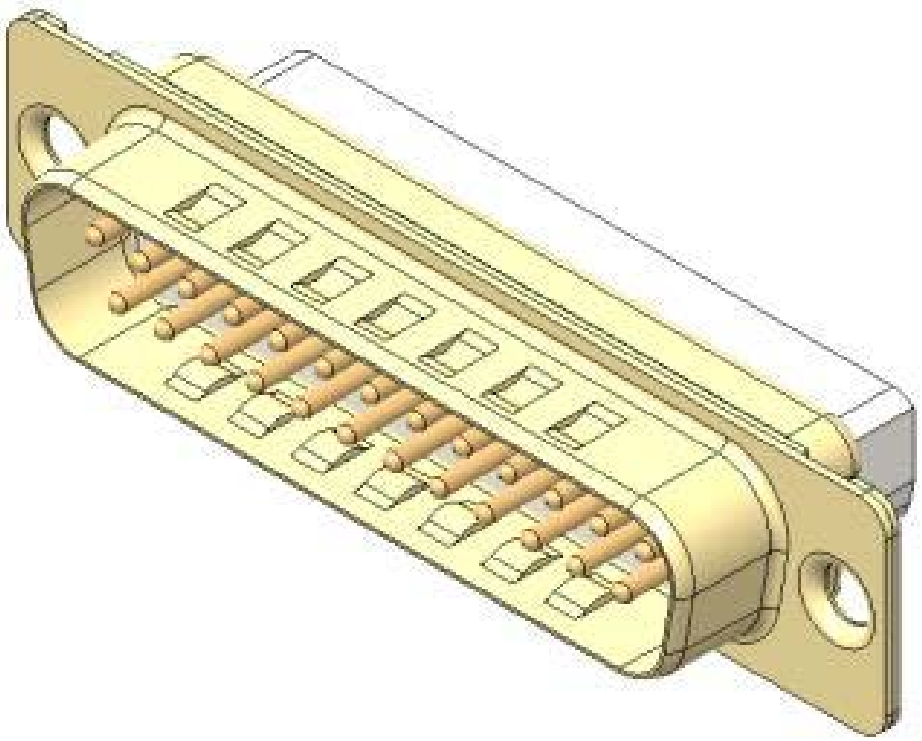

D*Sub Standard male connector with dimples

Sub-D technologies

Mobile connectors:

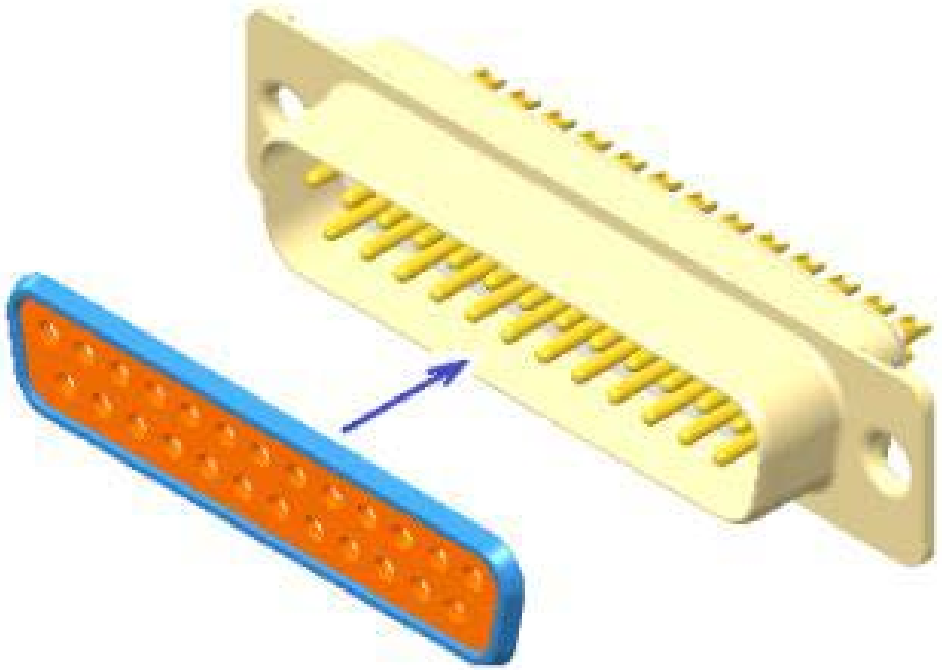

D*Sub Standard male connector with bi-material interfacial seal

AIRBUS

Sub-D technologies

Backshells:

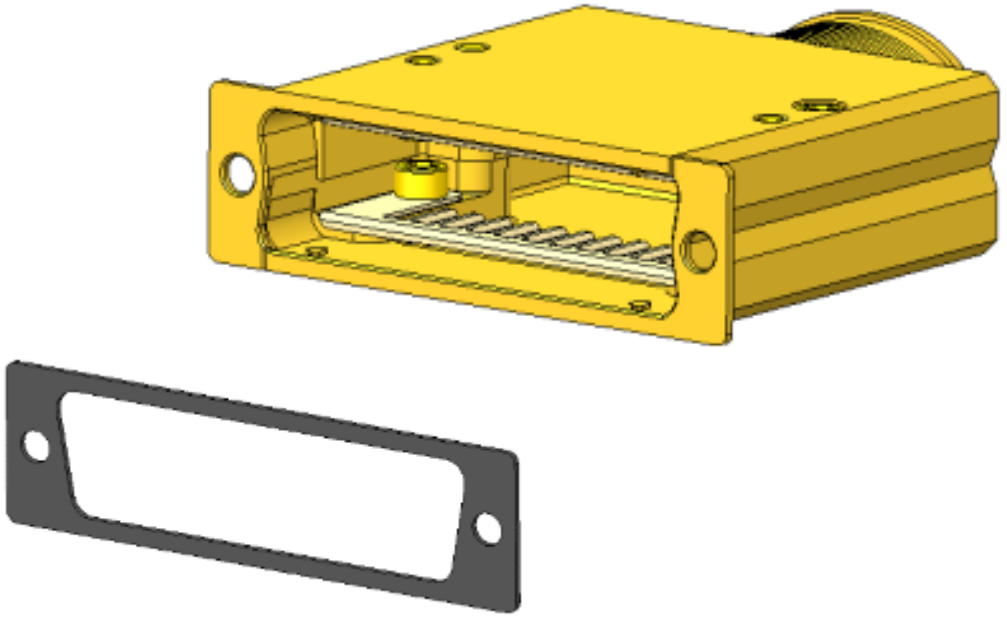

EMI flat gasket between backshell and connector with C&K haloring

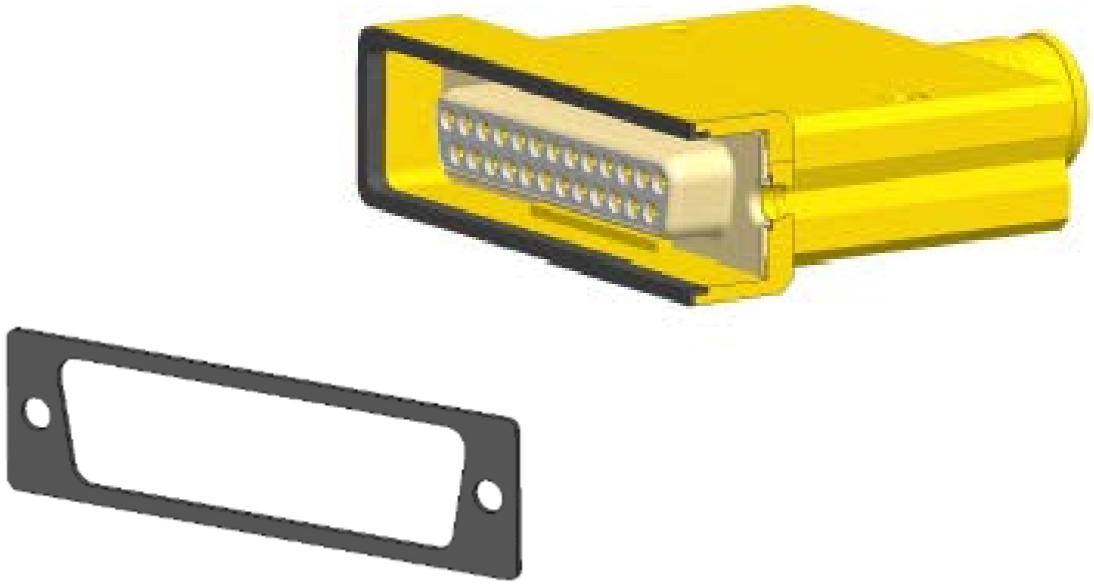

Encompassing backshell with C&K haloring

AIRBUS

Micro-D technologies

Panel mount connectors:

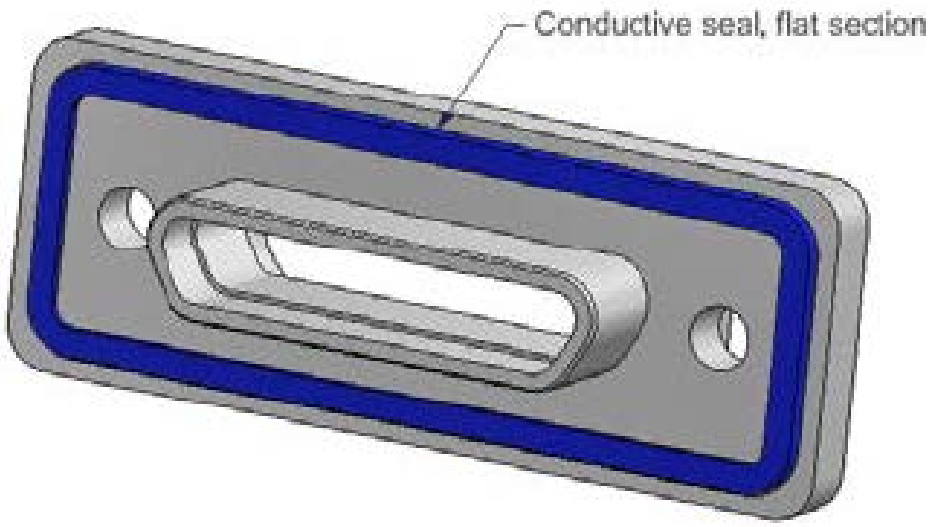

Rear mounting female connector with EMI gasket.

AIRBUS

Micro-D technologies

Mobile connectors:

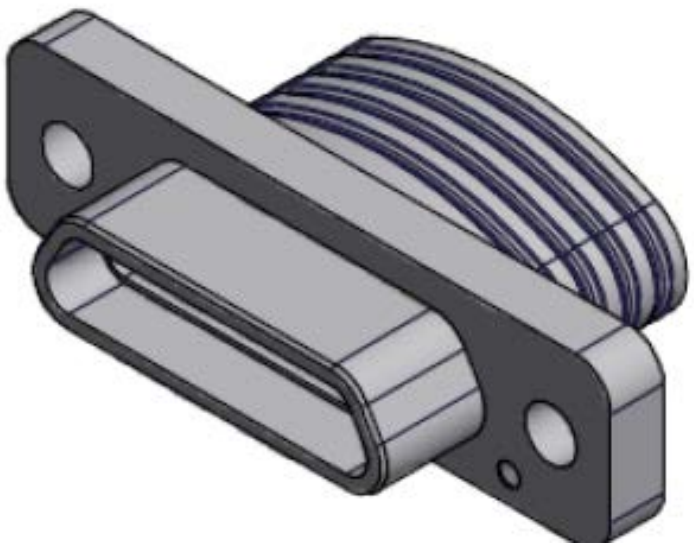

Plug with integrated funnel + screw

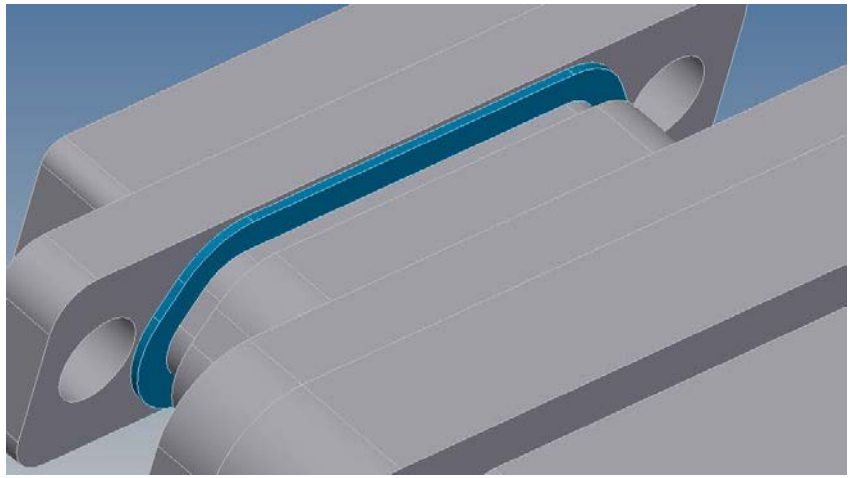

Plug with EMI gasket

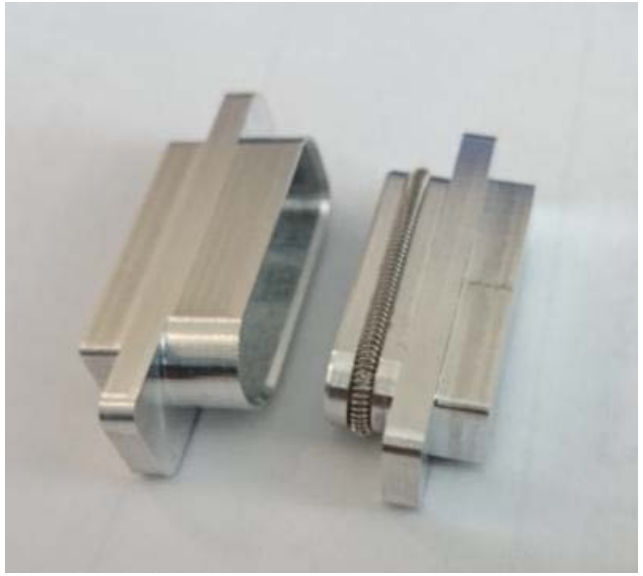

Plug with EMI spring

AIRBUS

Micro-D technologies

Backshells:

Backshell with EMI gasket

AIRBUS

Two types of vehicle

- Connectic DUT vehicle

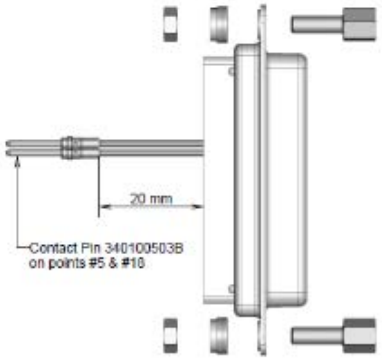

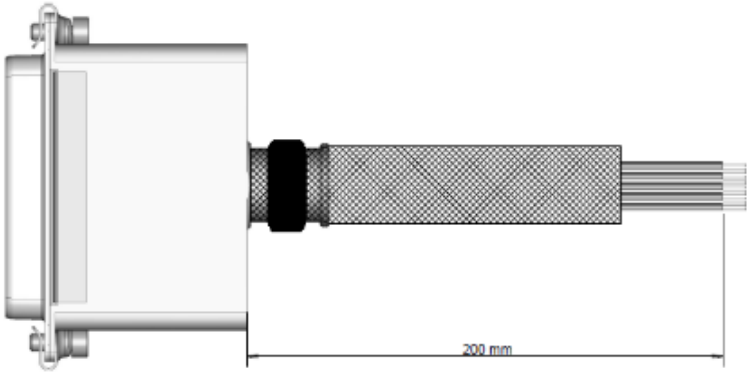

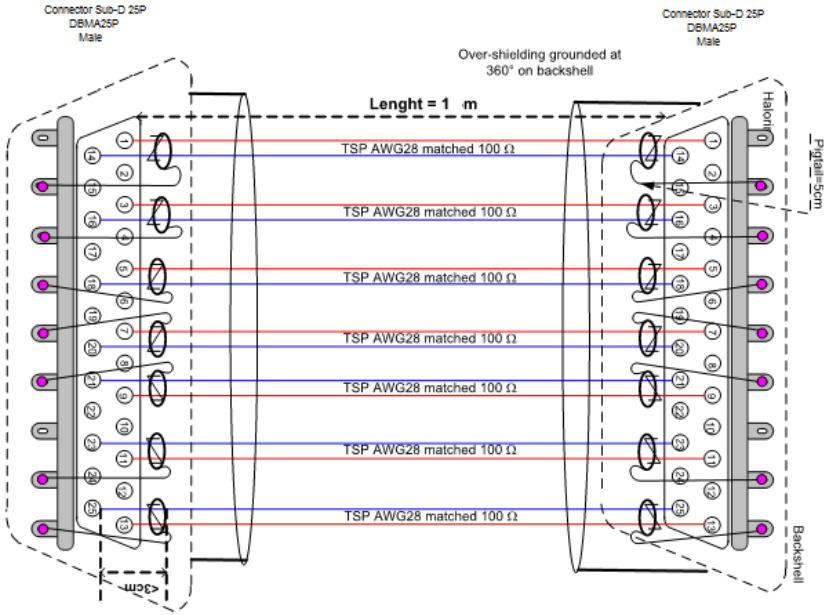

- Connector assemblies vehicle

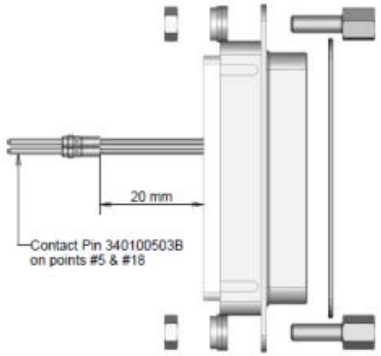

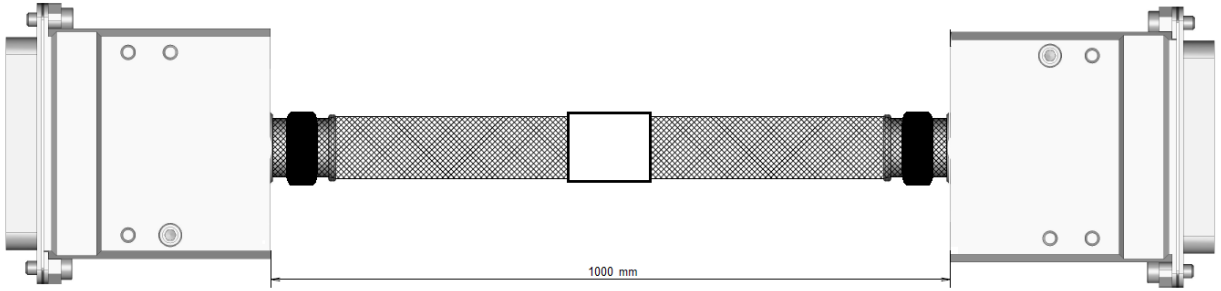

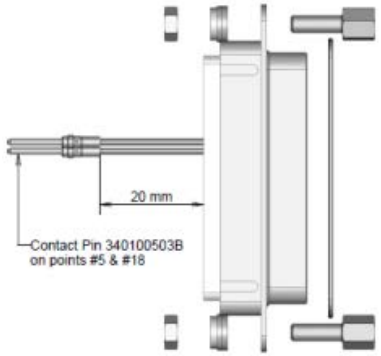

AIRBUS

Test campaign for connectic DUT

Voltage Proof

Insulation Resistance

Contact resistances

Transfer impedance LF
Triaxial method

Endurance
As per ESCC 3401§ 9.18

Contact resistances

Transfer impedance LF
Triaxial method

AXON | Manufacturer

AIRBUS

Test campaign for connector assemblies DUT

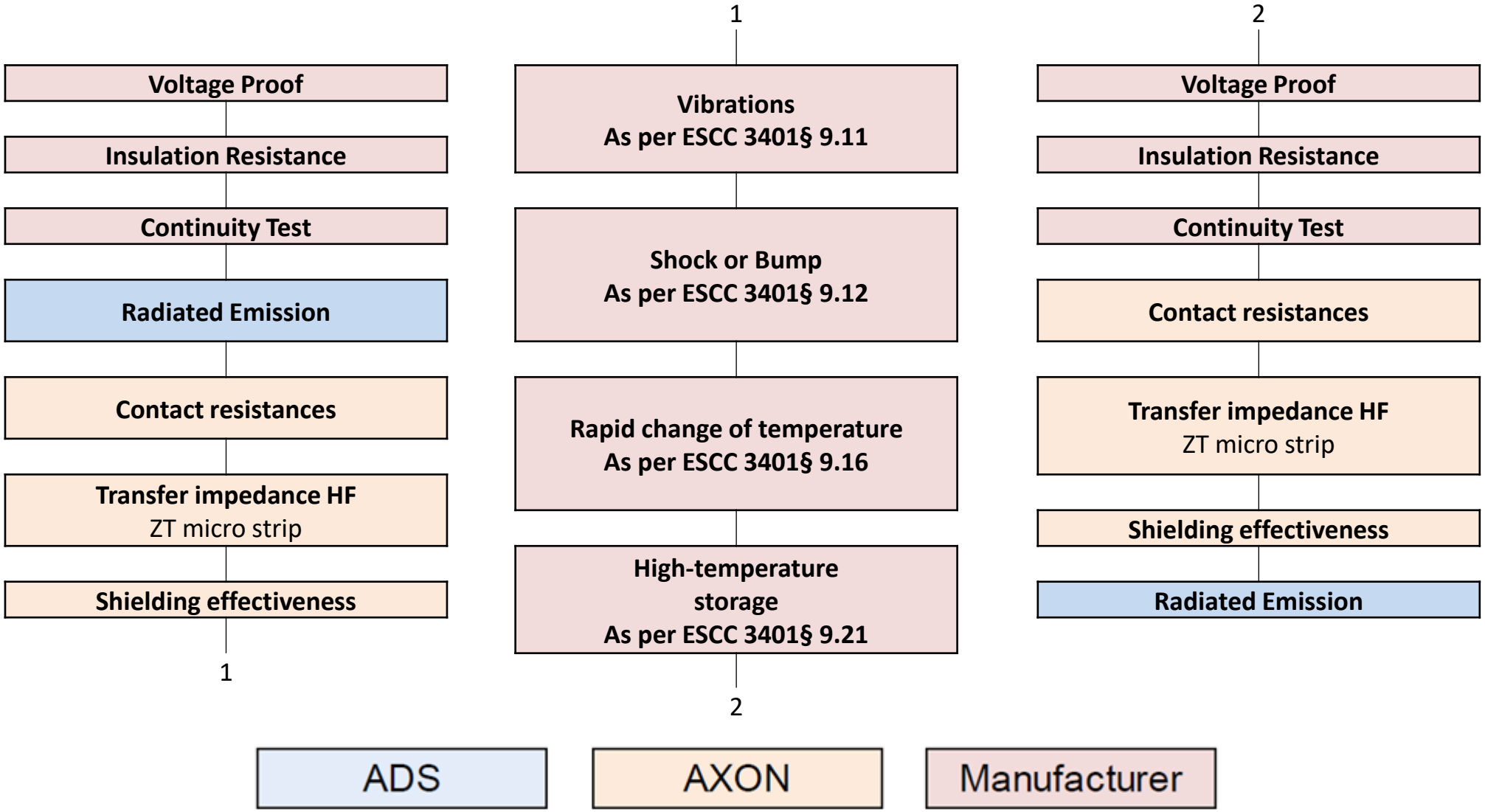

Product Qualification & Testing

AXON and C&K have tested their connectors according to the following standard:

Standard of test	
Voltage Proof	IEC Publication 512-2, Test 4a, Method 8 (rectangular connectors)
ELECTRICAL TESTS	IEC Publication 512-2, Test 4a, Method 8 (rectangular connectors)
Insulation Resistance	EC Publication 512-2, Test 3a, Method 8 (rectangular connectors)
Contact Resistances	ESCC Generic Specification N°3401
Endurance	ESCC
Continuity	NA
Vibration	Sinusoidal Vibration Testing : IEC Publication No. 512-4, Test 6d. Random Vibration Testing : IEC Publication No. 68-2-35,
Shock or Bump	IEC Publication No. 512-4, Test 6c
High temperature storage	IEC Publication 512-6, Test 11i
Rapid change of temperature	IEC Publication 512-6, Test 11d

Radiated emission test were performed according to ECSS-E-ST-20-07C standard.

RE test setup

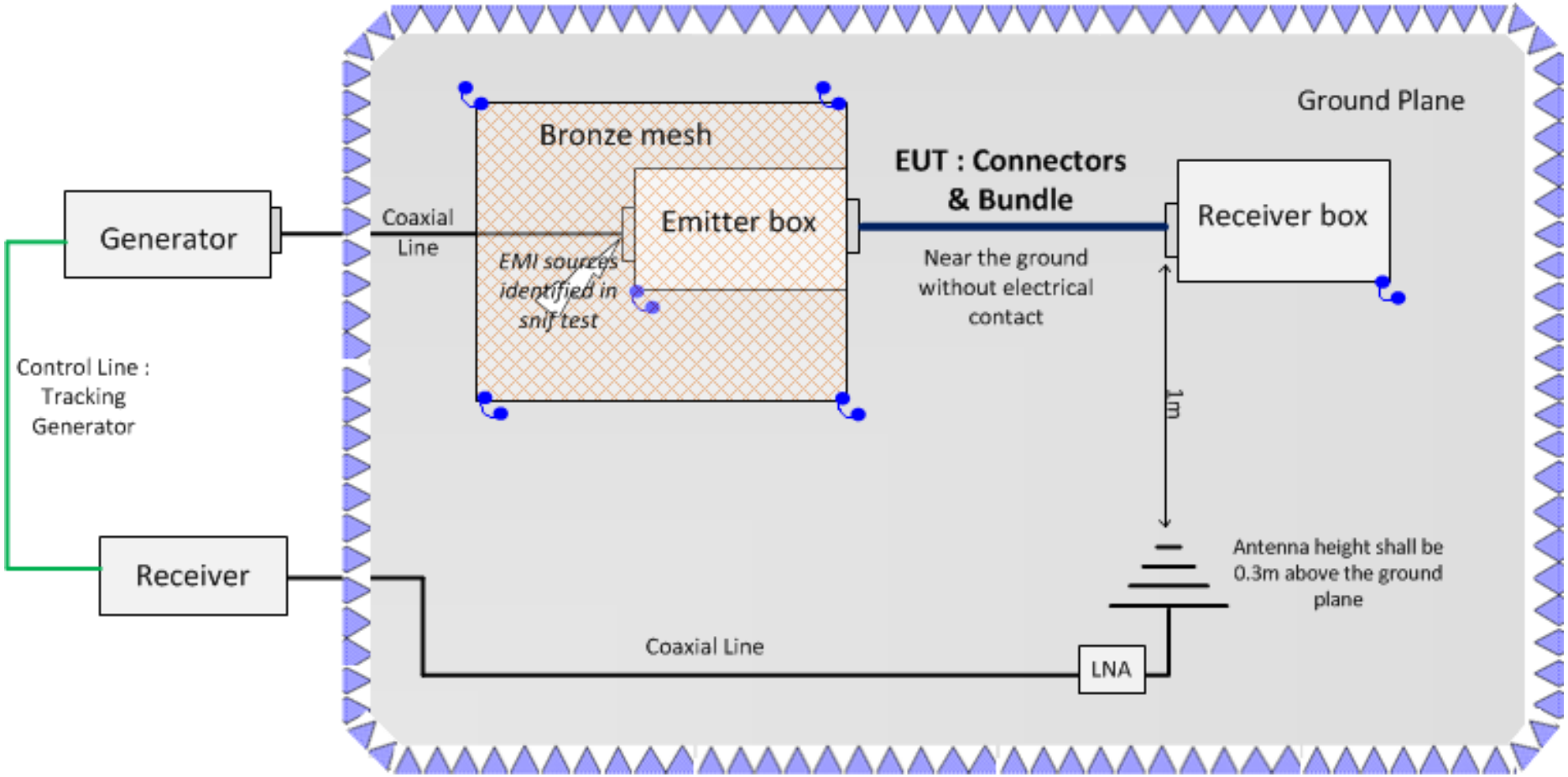

AIRBUS

Comparaison of radiated emission test results

Sample 1

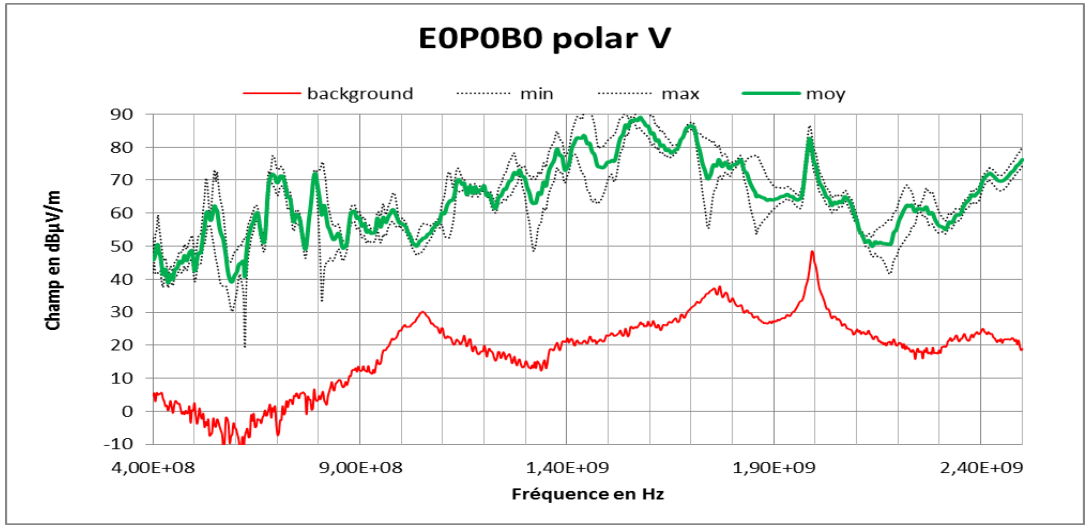

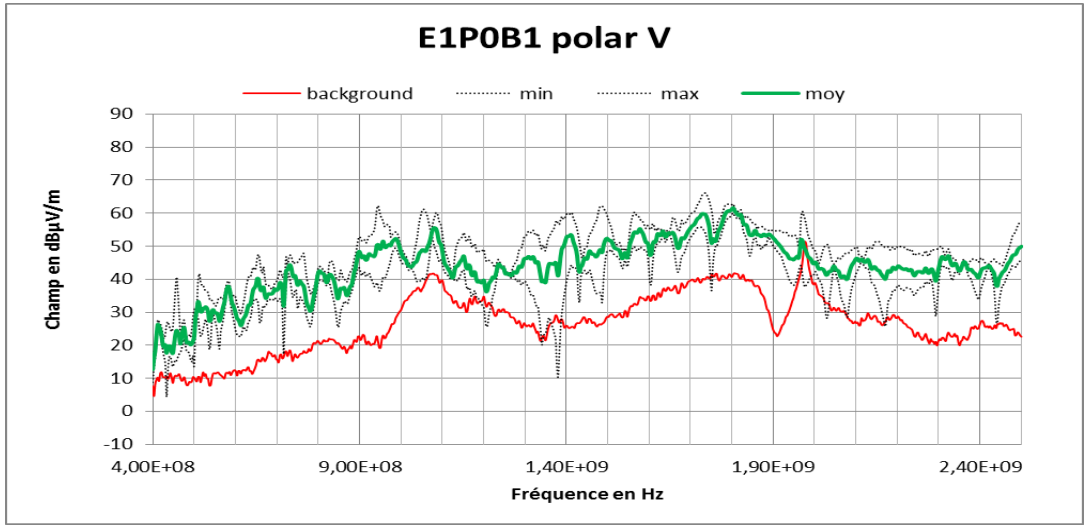

Sample 2

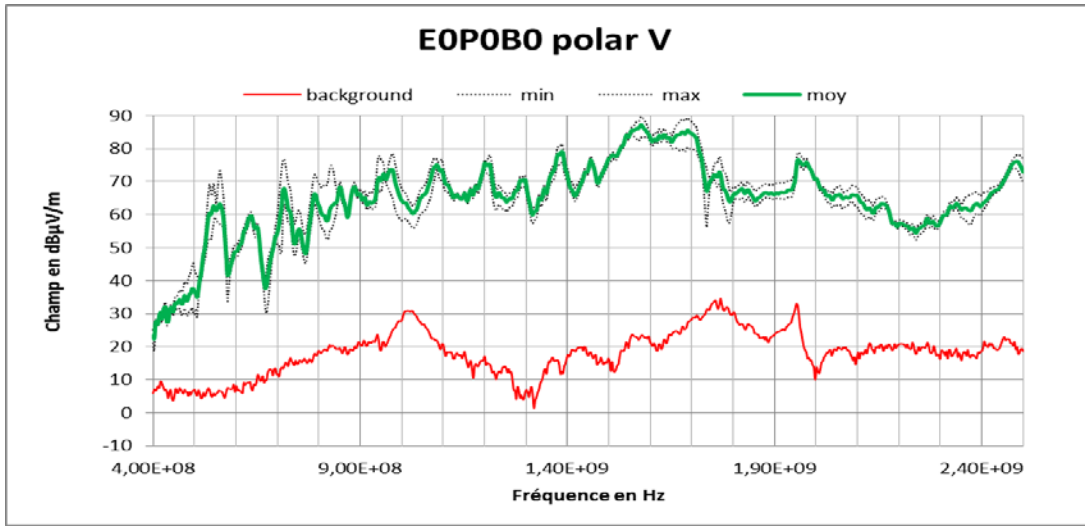

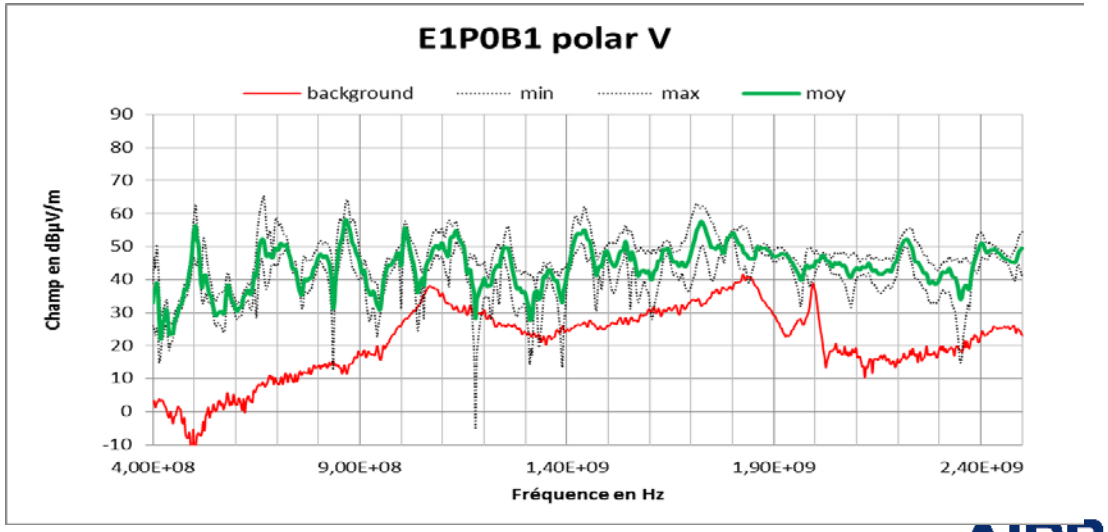

AIRBUS

Comparaison of radiated emission test results

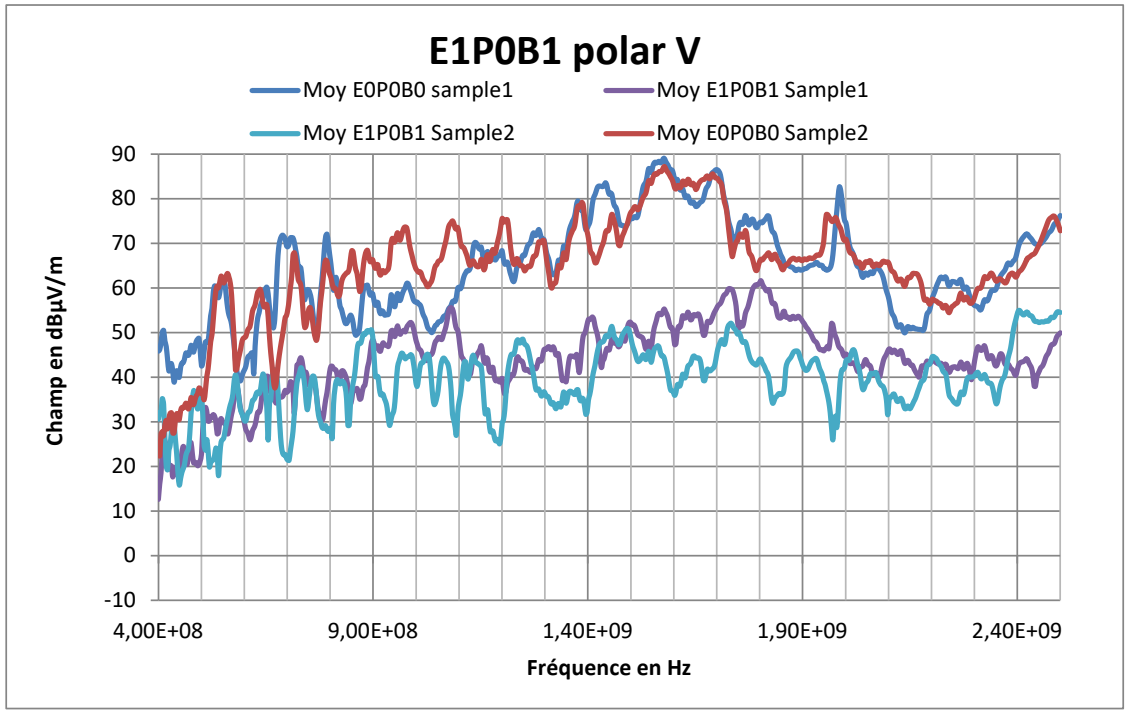

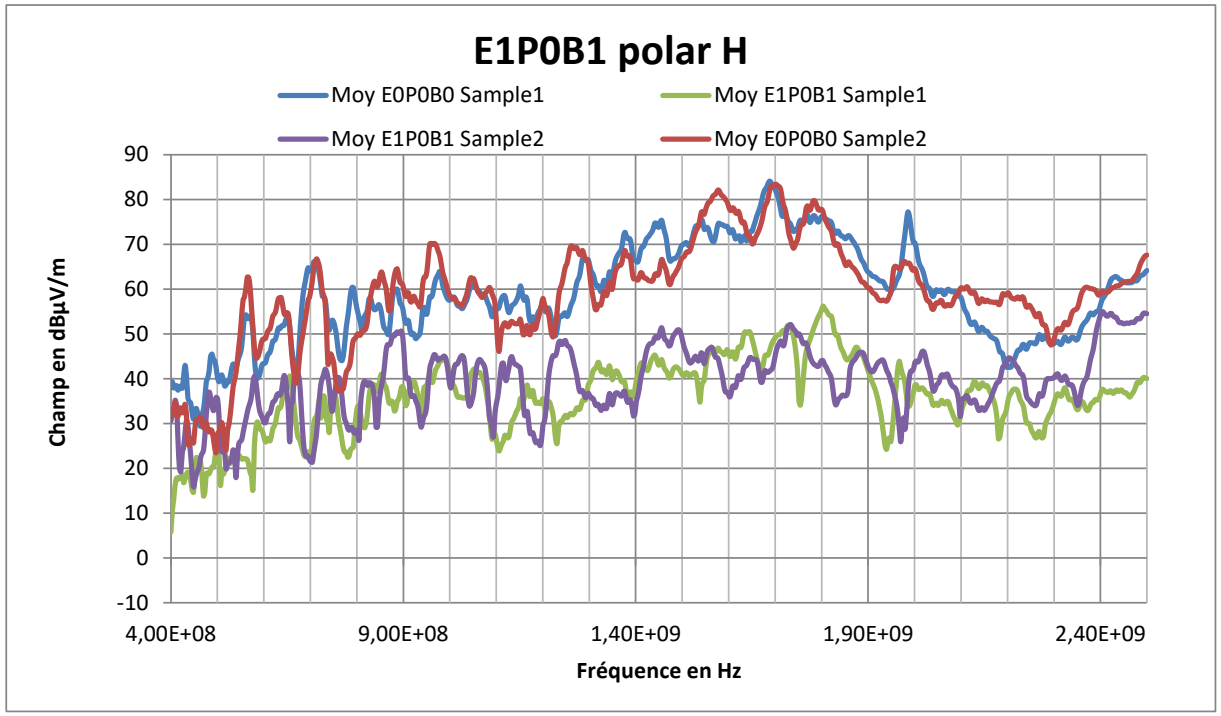

AIRBUS

Comparaison of Micro-D connector assemblies

The comparison is realized on the average of the difference between the samples and the reference E0P0B0 integrated all frequency band. Since, these differences are similar in polarization V and H, the whole is averaged.

E1

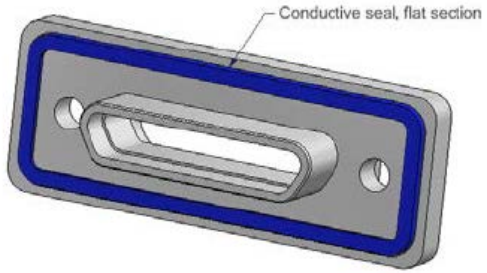

Rear mounting female connector with EMI gasket.

P1

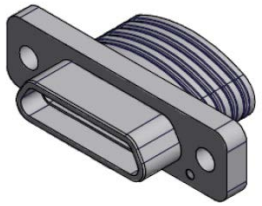

Plug with integrated funnel + screw

P2

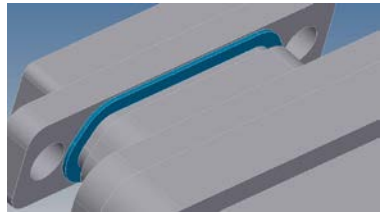

Plug with EMI gasket

P3

Plug with EMI spring

B1

Backshell with EMI gasket

Solution from best to worst	Name	Difference between sample (dB)	Shielding improvement (dB)
1	E1P3B1	6,9 I 0,8	13,9 & 20,8 I 21 & 22
2	E1P0B1	1,6 I 22	21 I 20 & -2
3	E1P2B1	0,6 I 3	9,2 I 12 & 16
	E1P1	11,9 I 6	17 & 5,1 I 3 & -3

AIRBUS

Comparaison of Sub-D connector assemblies

The comparison is realized on the average of the difference between the samples and the reference E0P0B0 integrated all frequency band. Since, these differences are similar in polarization V and H, the whole is averaged.

Panel mount connectors: Ex.		Plugs: Px		Backshells: Bx	
E0	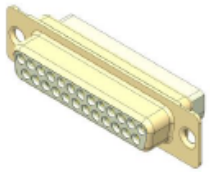 D*Sub standard female connector, rear mounting	P0	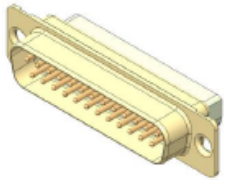 D*Sub Standard male connector	B0	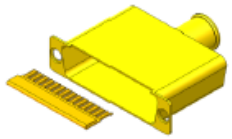 Standard backshell with haloring
E1	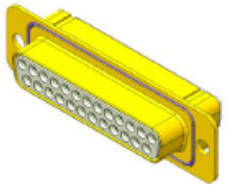 D*Sub female connector, machined shell with RF gasket in groove	P1	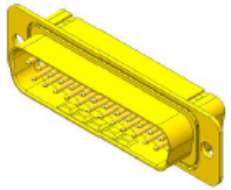 D*Sub male connector, machined shell with dimples	B1	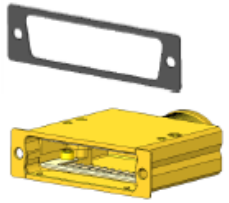 EMI flat gasket between backshell and connector with C&K haloring
E2	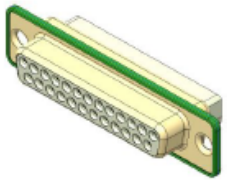 D*Sub standard female connector with surrounding EMI gasket	P2	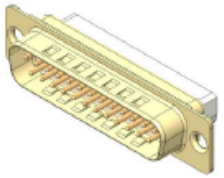 D*Sub Standard male connector with dimples	B2	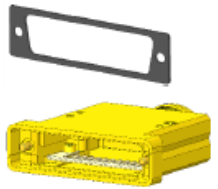 Encompassing backshell with C&K haloring

E3	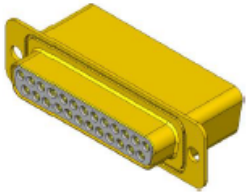 D*Sub female connector with integrated absorbing epoxy	P3	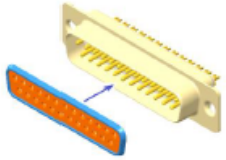 D*Sub Standard male connector with bi-material interfacial seal
		OP1	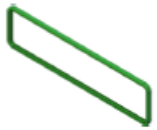 Surrounding EMI gasket

Solution from best to worst	Name	Shielding improvement (dB)
1	E0P0B2	30,7
2	E1P1B1	24,9
3	E0P1B1	22,3
4	E2P2+OP1B0	13,6
5	E2P3+OP1B0	8,8
6	E3P0B0	4,6
7	E1P0B1	3,0
8	E1P2B0	2,3

AIRBUS

Conclusion

Solutions to improve EMI shielding at connector and backshell level have been developed and tested.
Good improvement regarding radiated emission test have been measured.

Sub-D best solutions to prevent electromagnetic interference:

- Encompassing backshell but it requires the chassis of the equipment to be sufficiently flat and spacious,
- Machined fix connector with an RF gasket in a groove, machined mobile connector with dimples and a backshell with an EMI flat gasket.

Micro-D best solutions to prevent electromagnetic interference :

- Fix connector with a groove and an EMI gasket, mobile connector with an EMI spring and a backshell with EMI gasket,
- Fix connector with a groove and an EMI gasket, standard mobile connector and a backshell with EMI gasket.

Tests still need to be performed on C&K samples after environmental tests.
Some AXON samples will be tested again to check the reproducibility of the EMI improvement.

Thank you

Arnaud Thouand
arnaud.thouand@airbus.com

Questions?

AIRBUS